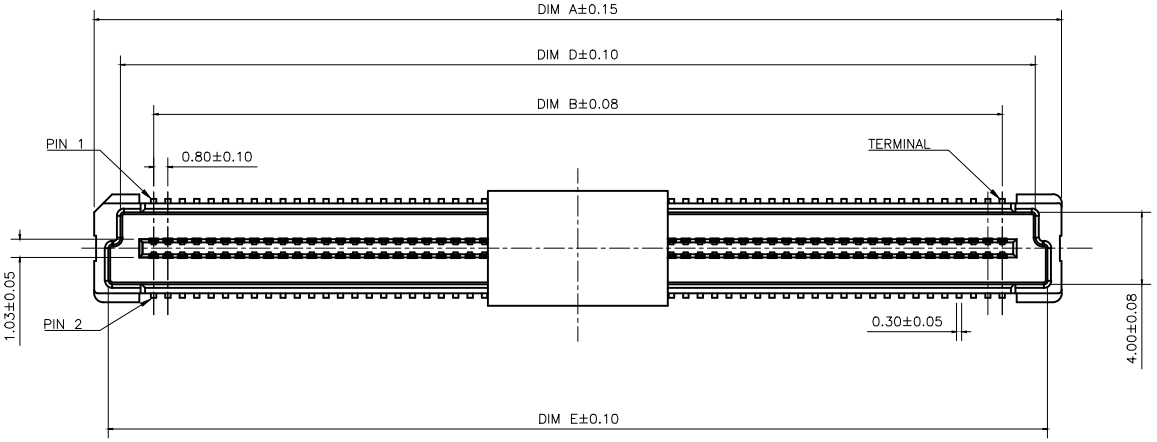

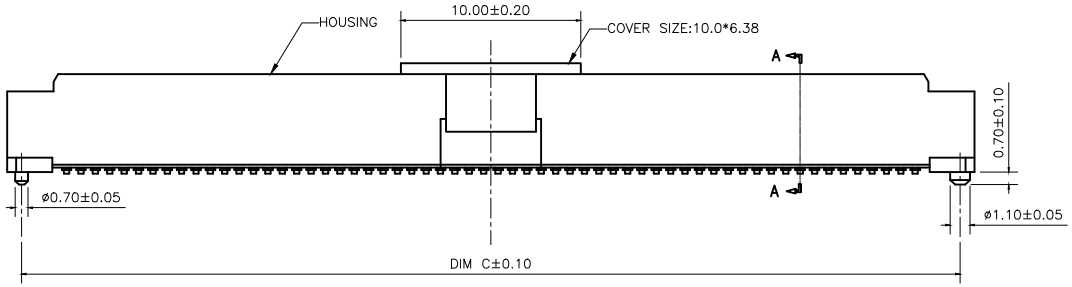

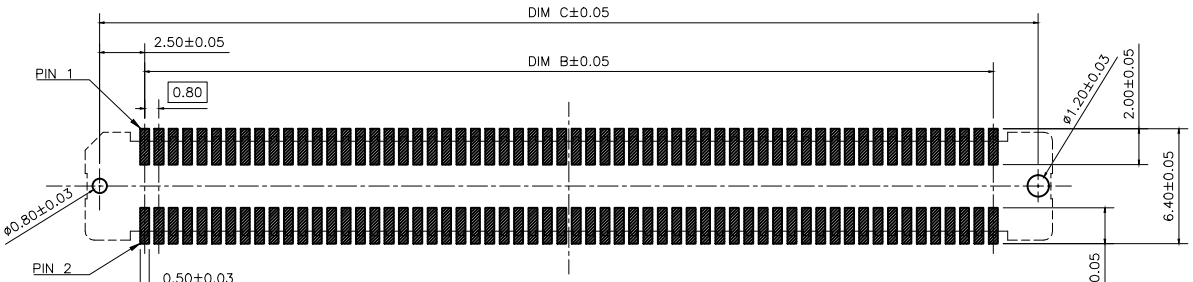

RECOMMEND PCB LAYOUT

TOLERENCE±0.05mm

NOTES:

1. MATERIAL:
   1.1 HOUSING: THERMOPLASTIC, HIGH TEMP. LCP UL94V-0.COLOR:BLACK OR NATURAL
   1.2 CONTACT: PHOSPHER BRONZE C5191-H.
   1.3 COVER: THERMOPLASTIC LCP, COLOR:NATURE
2. FINISH:
   2.1 CONTACT:
   50~100u" NICKEL UNDERPLATING OVERALL.
   G: 8u" MIN GOLD ON CONTACT AND 80~120u" MATTE TIN ON SOLDER
   C: 15u" MIN GOLD ON CONTACT AND 80~120u" MATTE TIN ON SOLDER
3. REFLOW SOLDER CAPABLE TO 260°C PER ACES SPEC.
4. SPEC.PLS REFER TO PS-51158-XXXXX-XXX
5. PART NUMBER

51154-XXX X X-XXX

CKTS

PACKING
7:TAPE REEL& WITH COVER

PLATING
G:8u" MIN GOLD ON CONTACT(LEAD FREE)
C:15u" MIN GOLD ON CONTACT(LEAD FREE)

XXX	Material&Color	Packing
001	LCP&BLACK	51154-XXXCR-00
002	LCP&NATURAL	51154-XXXCR-00

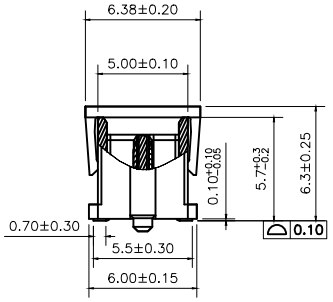

SECTION A-A

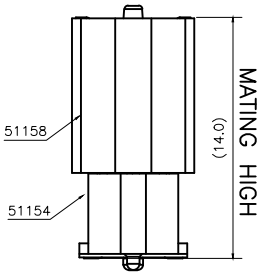

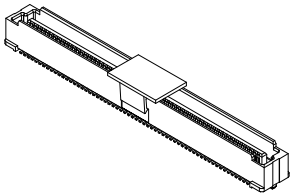

CKT	DIM A	DIM B	DIM C	DIM D	DIM E
30	17.80	11.20	16.20	14.88	16.23
40	21.80	15.20	20.20	18.88	20.23
60	29.80	23.20	28.20	26.88	28.23
80	37.80	31.20	36.20	34.88	36.23
100	45.80	39.20	44.20	42.88	44.23
120	53.80	47.20	52.20	50.88	52.23

QUALITY SYMBOLS
MAJOR
CRITICAL

GENERAL TOLERANCES
(UNLESS SPECIFIED)
X. ±0.5
.X ±0.25
.XX ±0.15
.XXX ±0.1
ANGLES ±2°

DRAWN BY	HUYANG	DATE 22'/09/05
CHECKED BY	BRAVE	DATE 22'/09/05
APPROVED BY	BRAVE	DATE 22'/09/05

ACES ELECTRONICS

TITLE: 0.8 mm PITCH BTB PLUG CONN. SMT D/R S/T TYPE

UNITS	SIZE	RFQ NO.
mm	A4	1909038
SCALE 1 : 1	SHEET NO. 1 OF 1	REV C
		DWG NO. 51154-XXXXX-XXX